174-SERIES

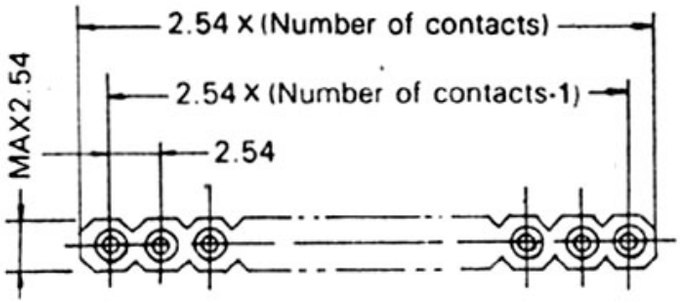

148-SERIES

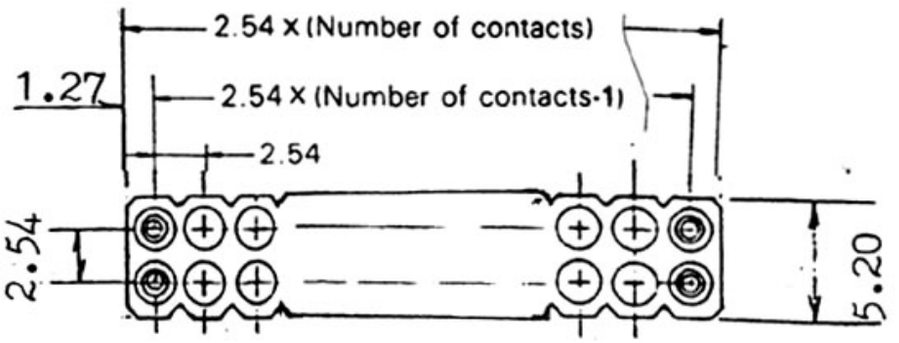

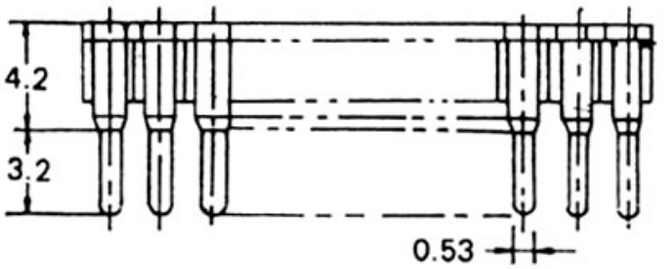

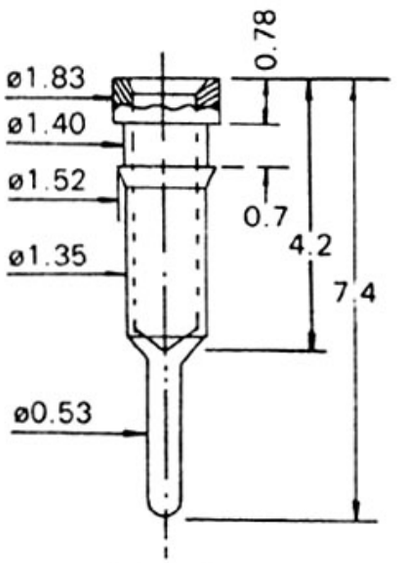

—7.4m/m—
FEMALE PIN

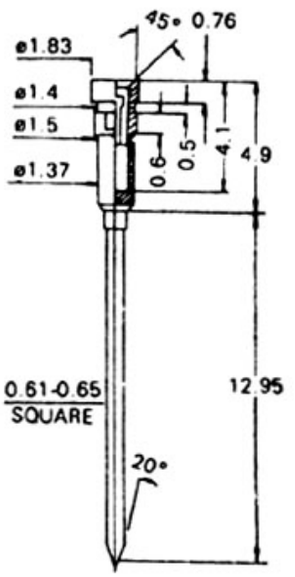

—17.8m/m—
FEMALE PIN

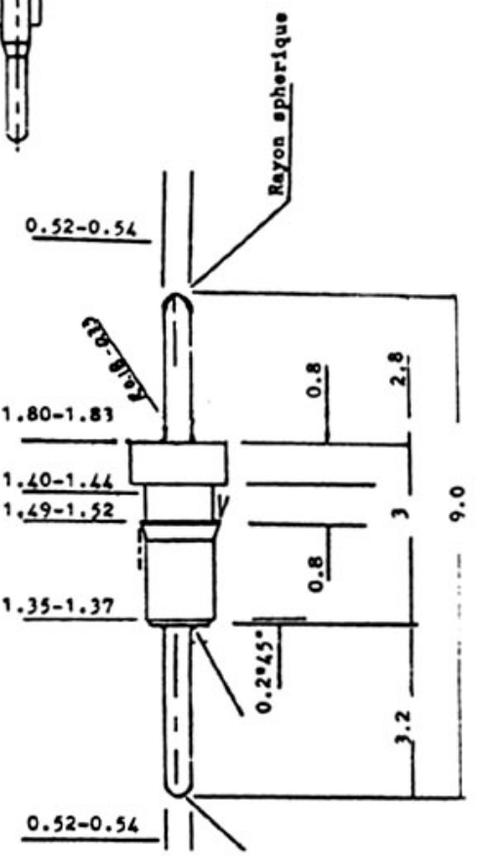

—9.0m/m—
MALE PIN

Ordering information

148 / 174	—	X	XX	—	XX	X
		2: Gold 3: Half Gold	00: 7.4 m/m 10: 17.8 m/m 20: 9.0 m/m		Position	1: Male Pin 2: Female Pin